E-mail Security

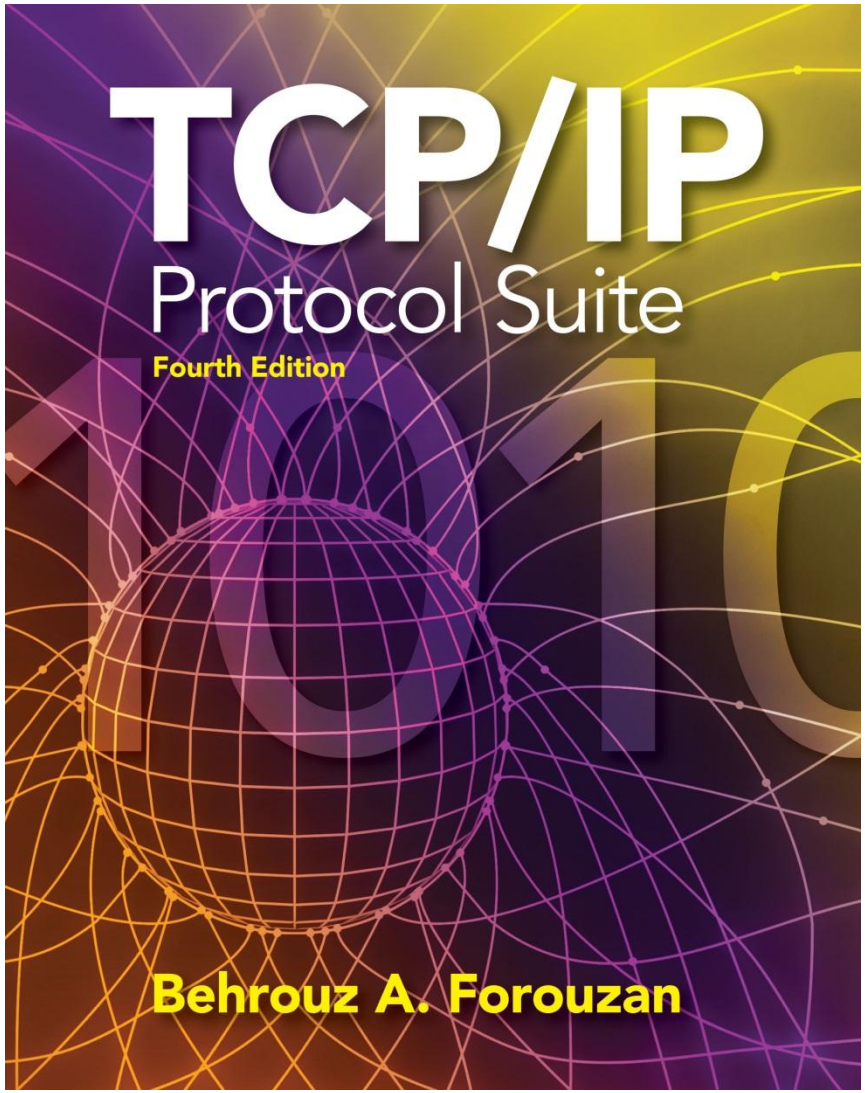

Copyright © The McGraw-Hill Companies, Inc. Permission required for reproduction or display.

Chapter Outline

23.1 Architecture

23.2 User Agent

23.3 Message Transfer Agent

23.4 Message Access Agent

23.5 MIME

23.6 Web-Based Mail

23.7 Electronic Mail Security

23-1 ARCHITECTURE

To explain the architecture of e-mail, we give four scenarios. We begin with the simplest situation and add complexity as we proceed. The fourth scenario is the most common in the exchange of e-mail.

Topics Discussed in the Section

- ✓ First Scenario
- ✓ Second Scenario
- ✓ Third Scenario
- ✓ Fourth Scenario

Figure 23.1 *First scenario*

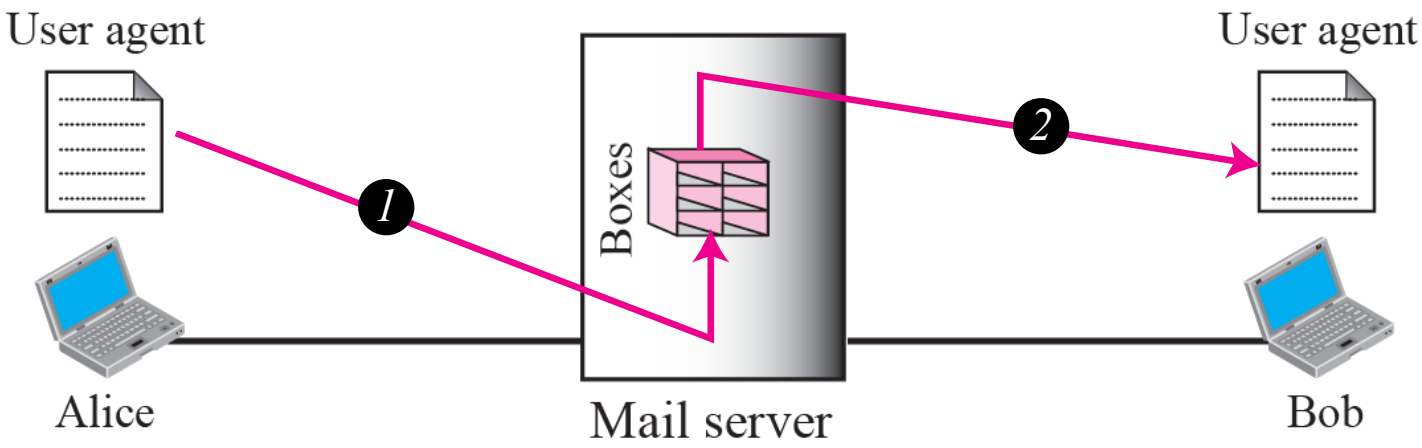

Note

When the sender and the receiver of an e-mail are on the same mail server, we need only two user agents.

Figure 23.2 *Second scenario*

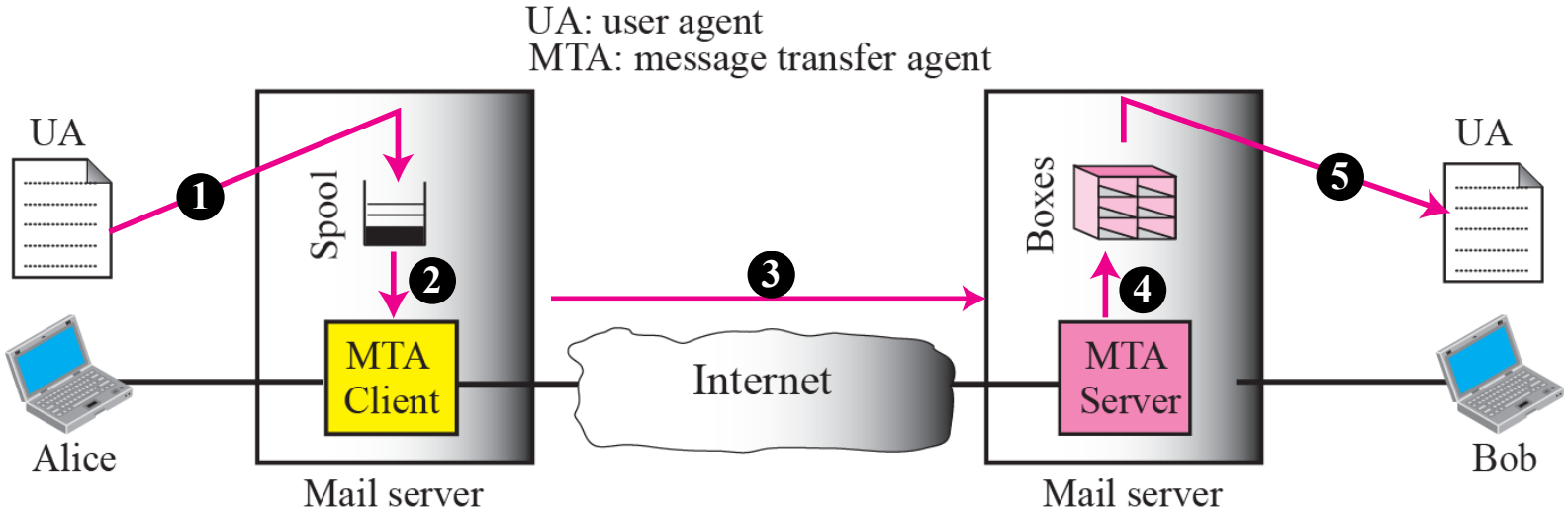

Note

When the sender and the receiver of an e-mail are on different mail servers, we need two UAs and a pair of MTAs (client and server).

Figure 23.3 *Third scenario*

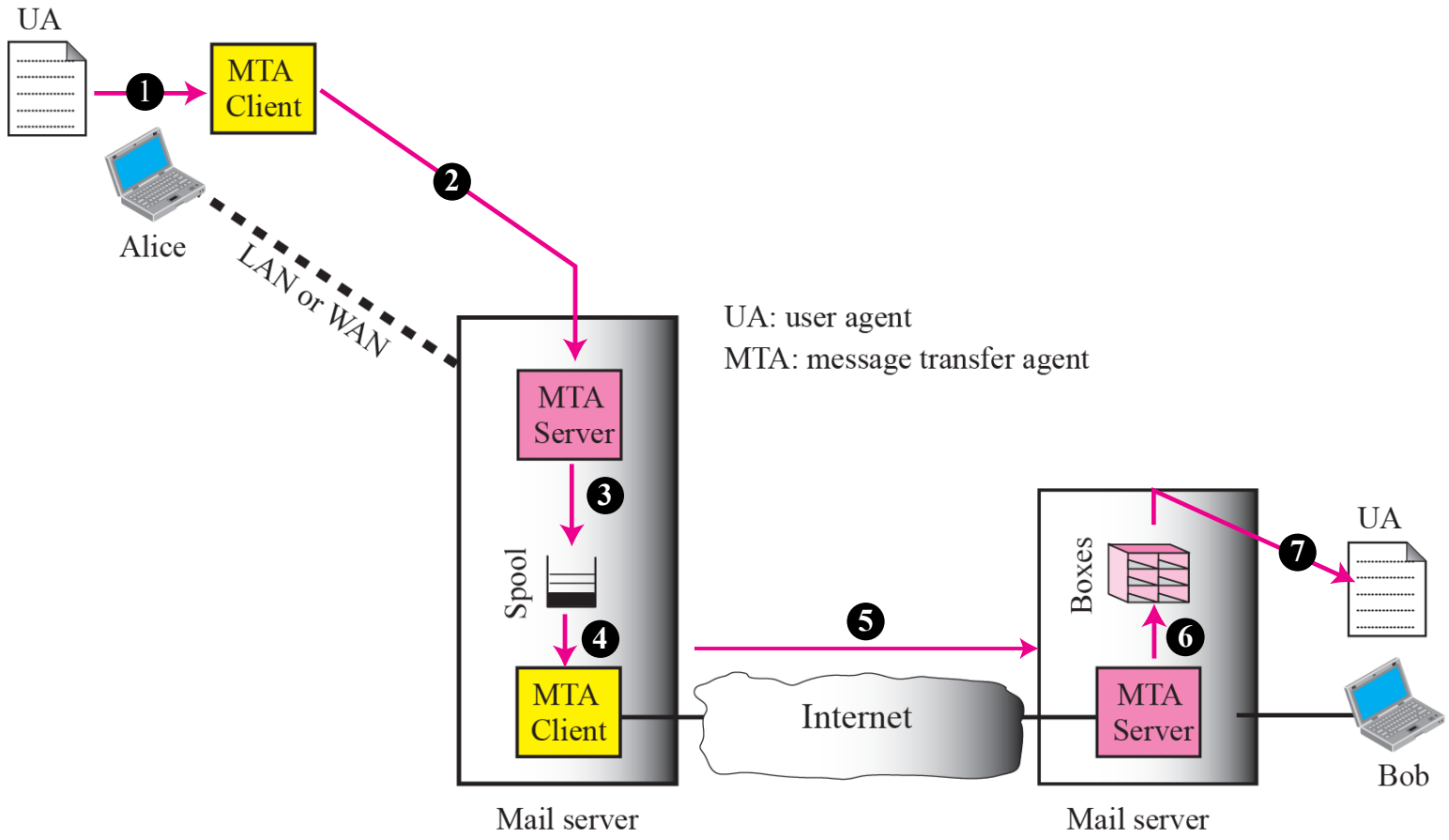

Note

When the sender is connected to the mail server via a LAN or a WAN, we need two UAs and two pairs of MTAs (client and server).

Figure 23.4 *Fourth scenario*

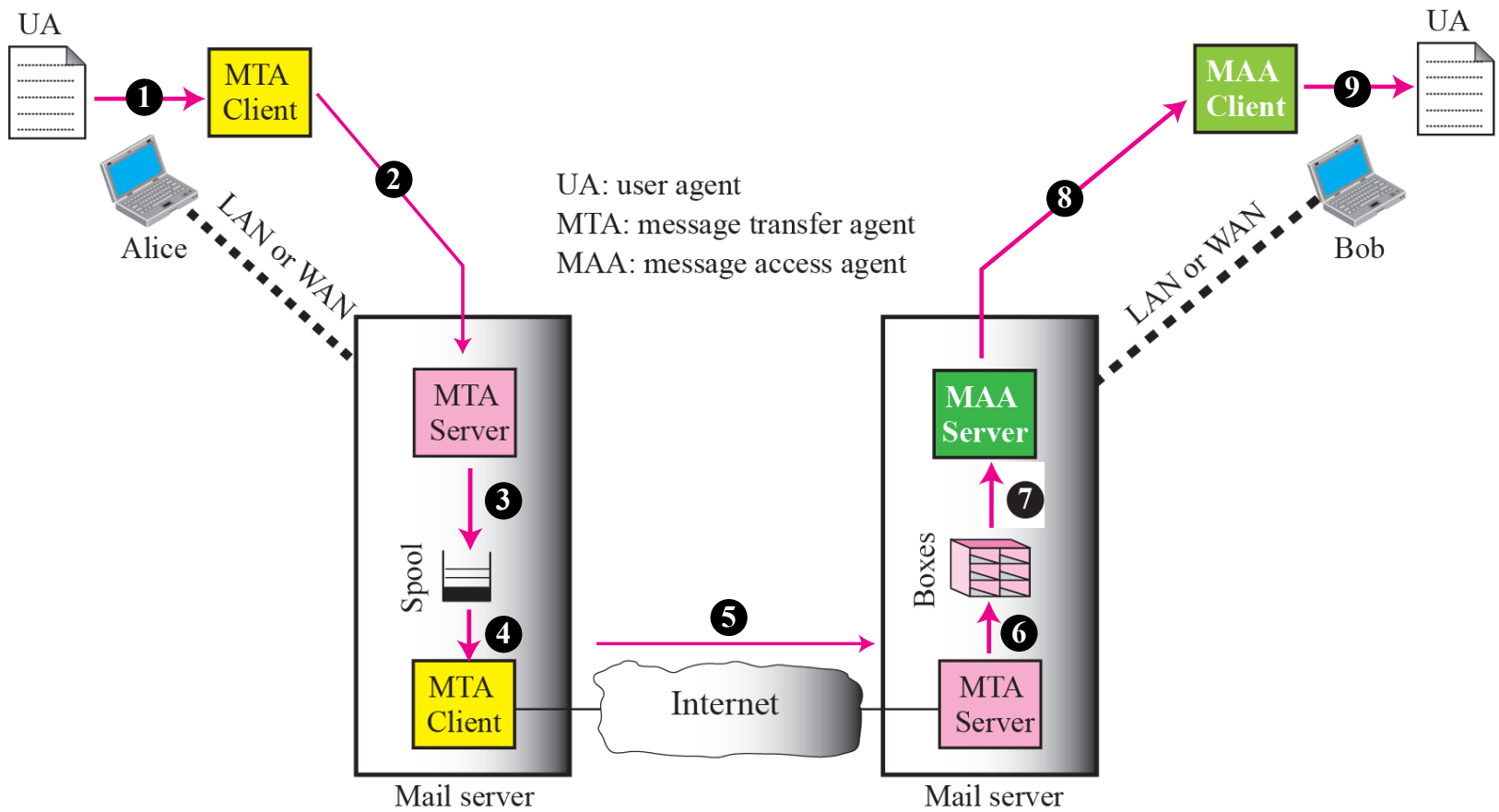

Note

When both sender and receiver are connected to the mail server via a LAN or a WAN, we need two UAs, two pairs of MTAs (client and server), and a pair of MAAs (client and server). This is the most common situation today.

Figure 23.5 *Push versus pull*

a. Client pushes messages

b. Client pulls messages

23-2 USER AGENT

The first component of an electronic mail system is the user agent (UA). It provides service to the user to make the process of sending and receiving a message easier.

Topics Discussed in the Section

- ✓ **Services Provided by a User Agent**
- ✓ **User Agent Types**
- ✓ **Sending Mail**
- ✓ **Receiving Mail**
- ✓ **Addresses**
- ✓ **Mailing List or Group List**

Note

Some examples of command-driven user agents are mail, pine, and elm.

Note

Some examples of GUI-based user agents are Eudora, Outlook, And Netscape.

Figure 23.6 *Format of an email*

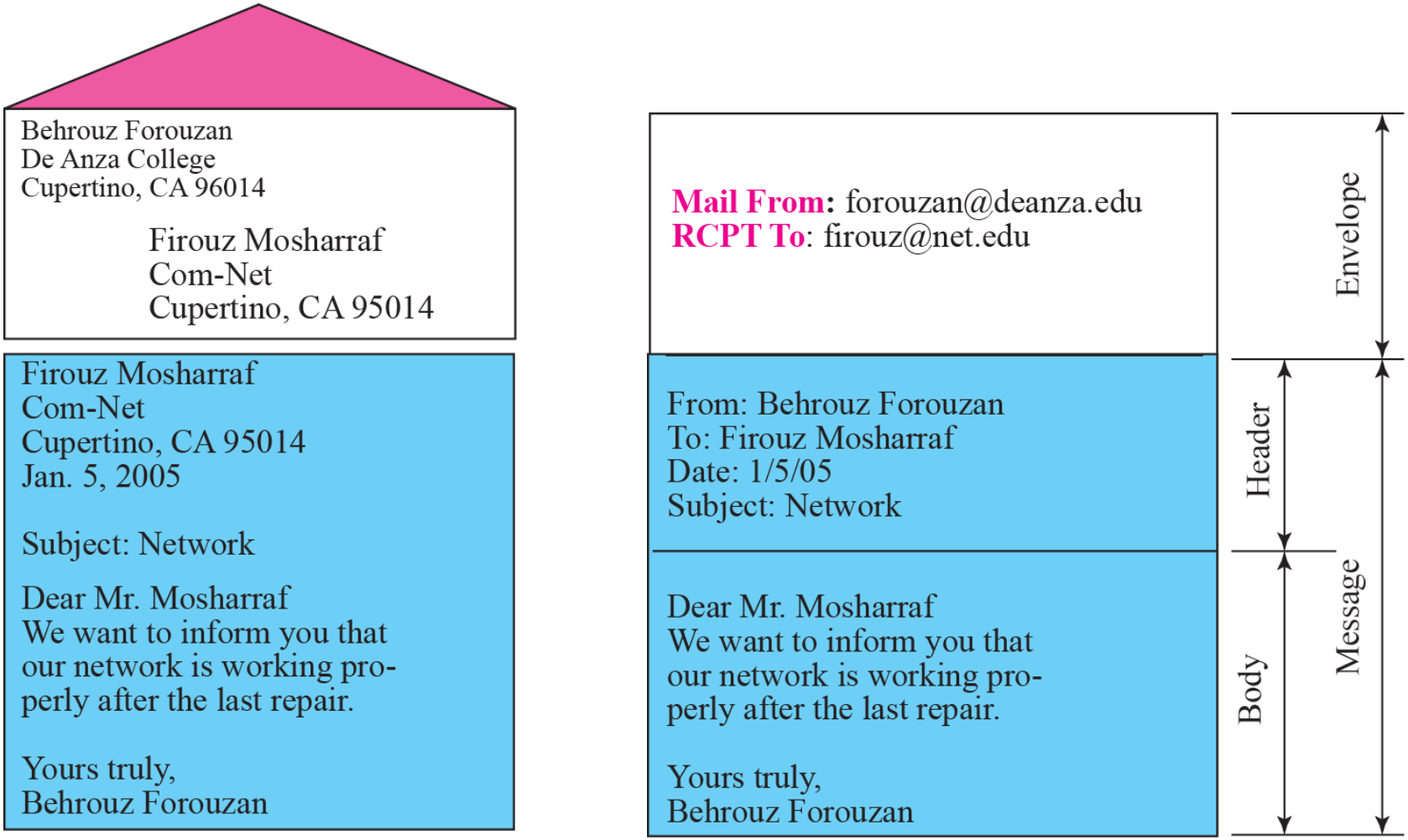

Figure 23.7 *E-mail address*

23-3 MESSAGE TRANSFER AGENT

The actual mail transfer is done through message transfer agents (MTAs). To send mail, a system must have the client MTA, and to receive mail, a system must have a server MTA. The formal protocol that defines the MTA client and server in the Internet is called Simple Mail Transfer Protocol (SMTP). As we said before, two pairs of MTA client-server programs are used in the most common situation (fourth scenario). Figure 23.8 shows the range of the SMTP protocol in this scenario.

Topics Discussed in the Section

- ✓ **Commands and Responses**
- ✓ **Mail Transfer Phases**

Figure 23.8 *SMTP range*

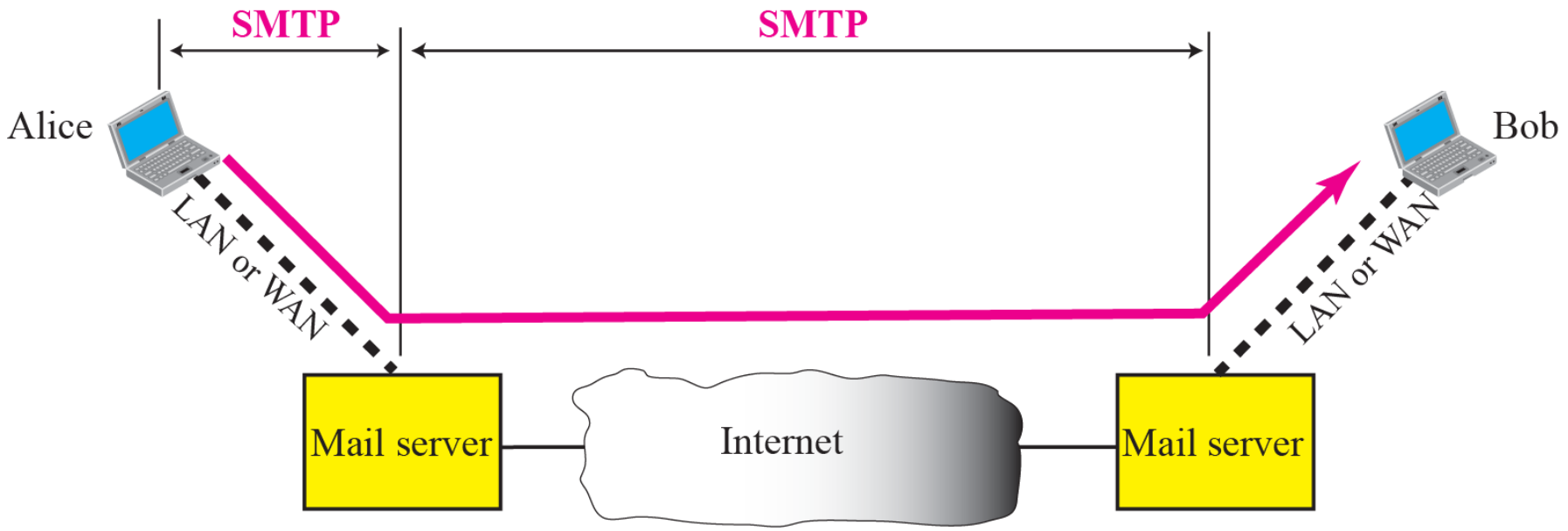

Figure 23.9 *Commands and responses*

Table 23.1 *Commands*

Keyword	*Argument(s)*	*Keyword*	*Argument(s)*
HELO	Sender's host name	NOOP	
MAIL FROM	Sender of the message	TURN	
RCPT TO	Intended recipient	EXPN	Mailing list
DATA	Body of the mail	HELP	Command name
QUIT		SEND FROM	Intended recipient
RSET		SMOL FROM	Intended recipient
VRFY	Name of recipient	SMAL FROM	Intended recipient

Table 23.2 *Responses*

Code	*Description*
	Positive Completion Reply
211	System status or help reply
214	Help message
220	Service ready
221	Service closing transmission channel
250	Request command completed
251	User not local; the message will be forwarded
	Positive Intermediate Reply
354	Start mail input
	Transient Negative Completion Reply
421	Service not available
450	Mailbox not available
451	Command aborted: local error
452	Command aborted; insufficient storage
	Permanent Negative Completion Reply
500	Syntax error; unrecognized command
501	Syntax error in parameters or arguments
502	Command not implemented
503	Bad sequence of commands
504	Command temporarily not implemented
550	Command is not executed; mailbox unavailable
551	User not local
552	Requested action aborted; exceeded storage location
553	Requested action not taken; mailbox name not allowed
554	Transaction failed

Figure 23.10 *Connection establishment*

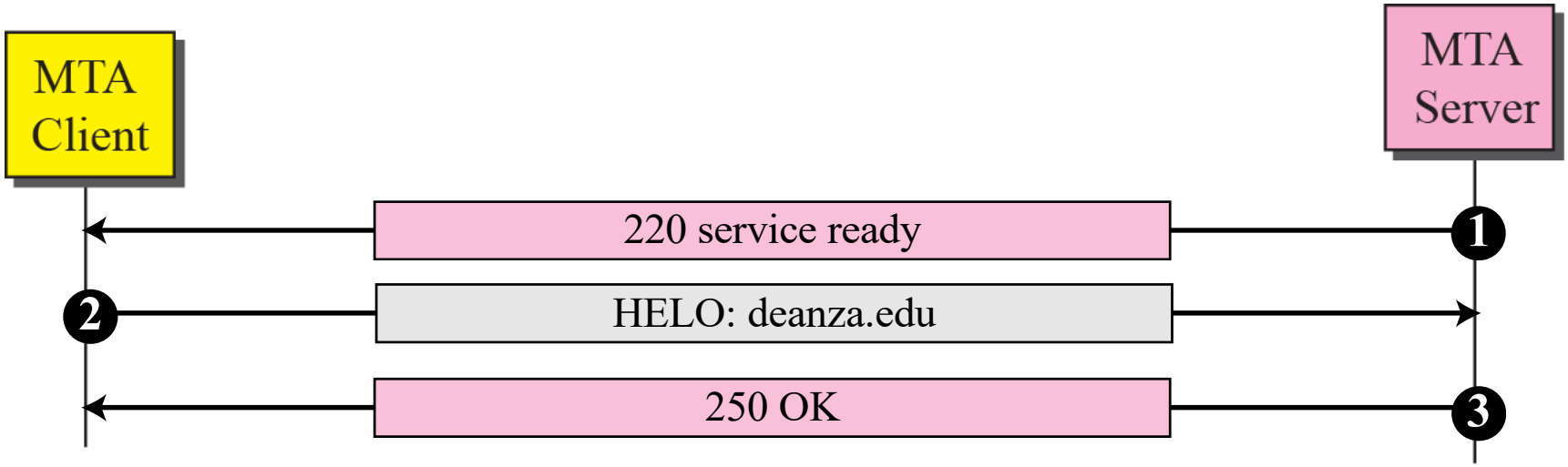

Figure 23.11 *Message transfer*

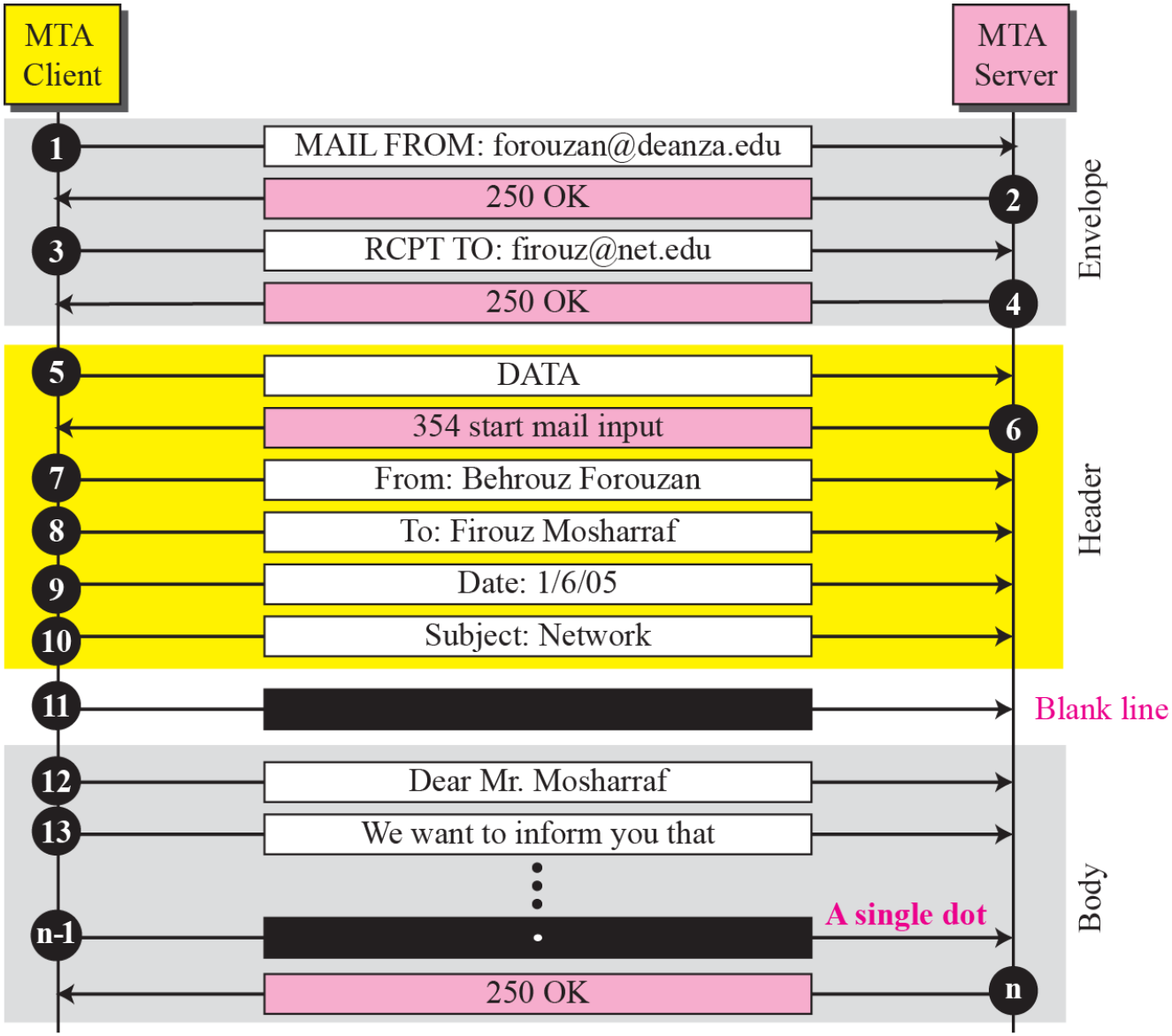

Figure 23.12 *Connection termination*

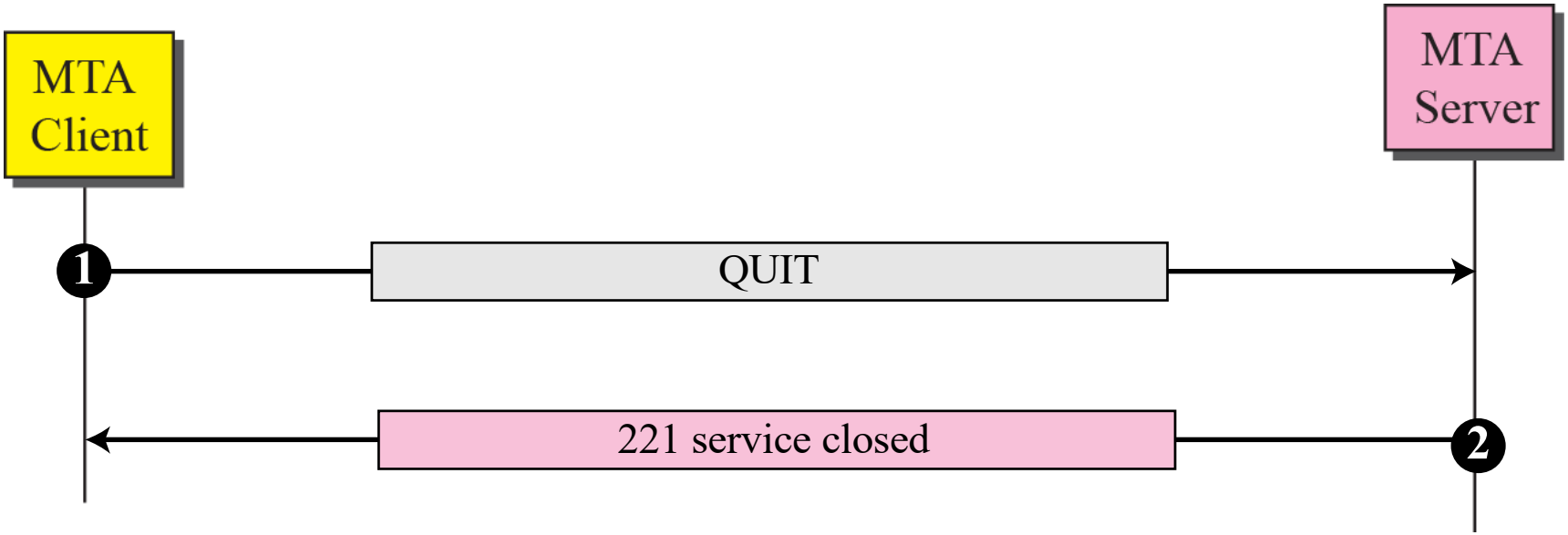

Example 23.1

Let us see how we can directly use SMTP to send an e-mail and simulate the commands and responses we described in this section. We use TELNET to log into port 25 (the well-known port for SMTP). We then use the commands directly to send an e-mail. In this example, forouzanb@adelphia.net is sending an e-mail to himself. The first few lines show TELNET trying to connect to the adelphia mail server.

```
$ telnet mail.adelphia.net 25
Trying 68.168.78.100...
Connected to mail.adelphia.net (68.168.78.100).
```

After connection, we can type the SMTP commands and then receive the responses as shown below. We have shown the commands in black and the responses in color. Note that we have added for clarification some comment lines, designated by the "=" sign. These lines are not part of the e-mail procedure.

Example 19.1 *Continued*

```
=================== Connection Establishment ================
  220 mta13.adelphia.net SMTP server ready Fri, 6 Aug 2004 . . .
HELO mail.adelphia.net
  250 mta13.adelphia.net
======================        Envelope          ==================
MAIL FROM: forouzanb@adelphia.net
  250 Sender <forouzanb@adelphia.net> Ok
RCPT TO: forouzanb@adelphia.net
  250 Recipient <forouzanb@adelphia.net> Ok
===================      Header and Body      ================
DATA
  354 Ok Send data ending with <CRLF>.<CRLF>
From: Forouzan
TO: Forouzan

This is a test message
to show SMTP in action.
.
```

```
===================== Connection Termination ==================
  250 Message received: adelphia.net@mail.adelphia.net
QUIT
     221 mta13.adelphia.net SMTP server closing connection
Connection closed by foreign host.
```

23-4 MESSAGE ACCESS AGENT

The first and the second stages of mail delivery use SMTP. However, SMTP is not involved in the third stage because SMTP is a push protocol; it pushes the message from the client to the server. In other words, the direction of the bulk data (messages) is from the client to the server. On the other hand, the third stage needs a pull protocol; the client must pull messages from the server. The direction of the bulk data are from the server to the client. The third stage uses a message access agent.

Topics Discussed in the Section

- ✓ **POP3**
- ✓ **IMAP4**

Figure 23.13 *Pop3 and IMAP4*

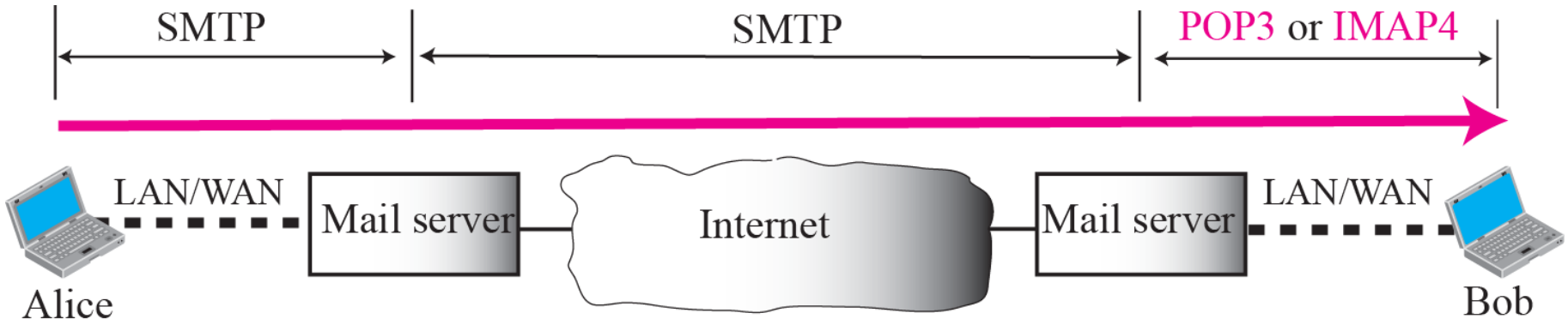

Figure 23.14 *Pop3*

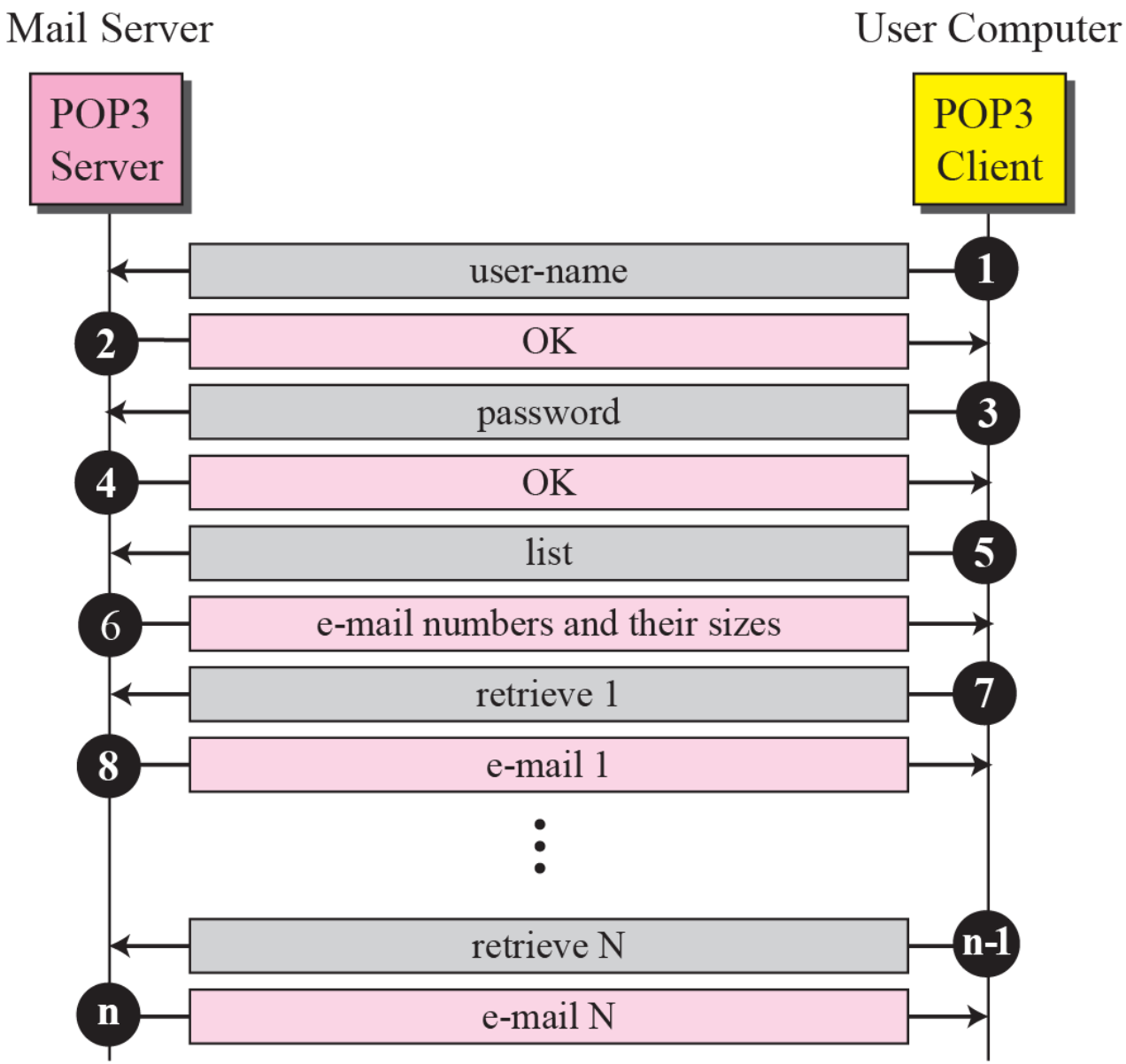

23-5 MIME

Electronic mail has a simple structure. Its simplicity, however, comes with a price. It can send messages only in NVT 7-bit ASCII format. In other words, it has some limitations. Multipurpose Internet Mail Extensions (MIME) is a supplementary protocol that allows non-ASCII data to be sent through e-mail. MIME transforms non-ASCII data at the sender site to NVT ASCII data and delivers it to the client MTA to be sent through the Internet. The message at the receiving site is transformed back to the original data.

Topics Discussed in the Section

- ✓ **MIME Headers**

Figure 23.15 *MIME*

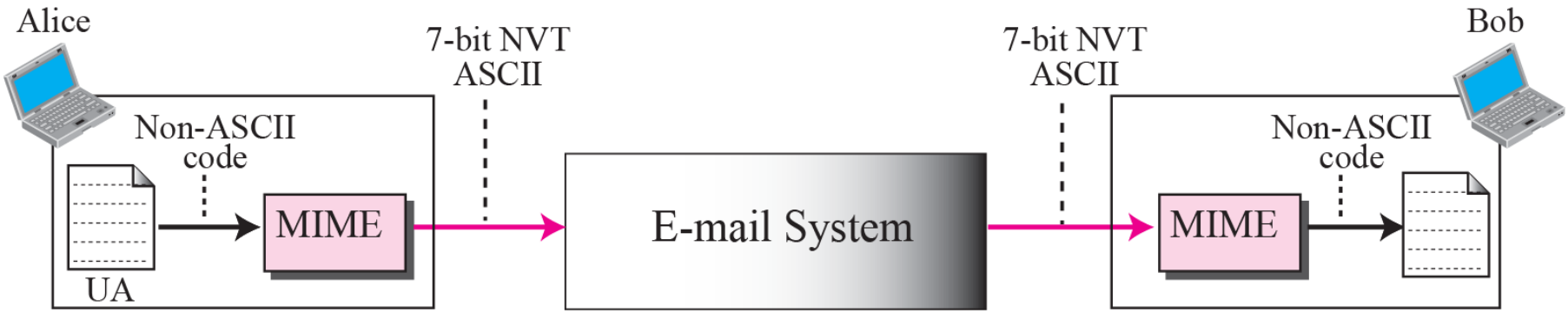

Figure 23.16 *MIME header*

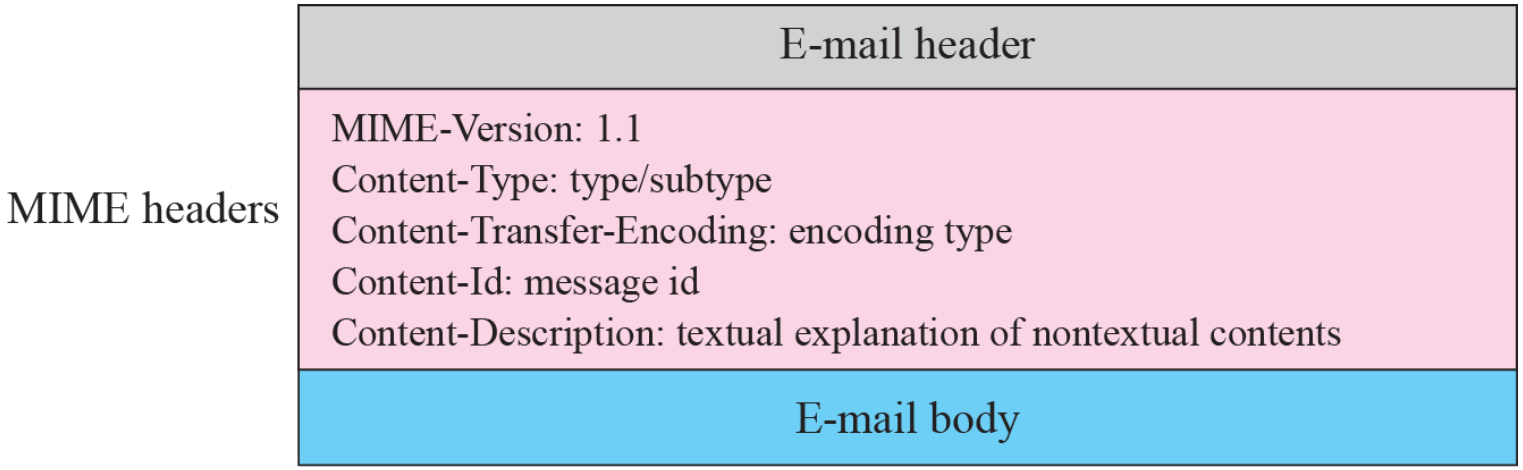

Table 23.3 *Data Types and Subtypes in MIME*

Type	*Subtype*	*Description*
Text	Plain	Unformatted
	HTML	HTML format (see Appendix E)
Multipart	Mixed	Body contains ordered parts of different data types
	Parallel	Same as above, but no order
	Digest	Similar to Mixed, but the default is message/RFC822
	Alternative	Parts are different versions of the same message
Message	RFC822	Body is an encapsulated message
	Partial	Body is a fragment of a bigger message
	External-Body	Body is a reference to another message
Image	JPEG	Image is in JPEG format
	GIF	Image is in GIF format
Video	MPEG	Video is in MPEG format
Audio	Basic	Single channel encoding of voice at 8 KHz
Application	PostScript	Adobe PostScript
	Octet-stream	General binary data (eight-bit bytes)

Table 23.4 *Content-Transfer-Encoding*

Type	*Description*
7bit	NVT ASCII characters and short lines
8bit	Non-ASCII characters and short lines
Binary	Non-ASCII characters with unlimited-length lines
Base64	6-bit blocks of data are encoded into 8-bit ASCII characters
Quoted-printable	Non-ASCII characters are encoded as an equal sign plus an ASCII code

Figure 23.17 *Base64*

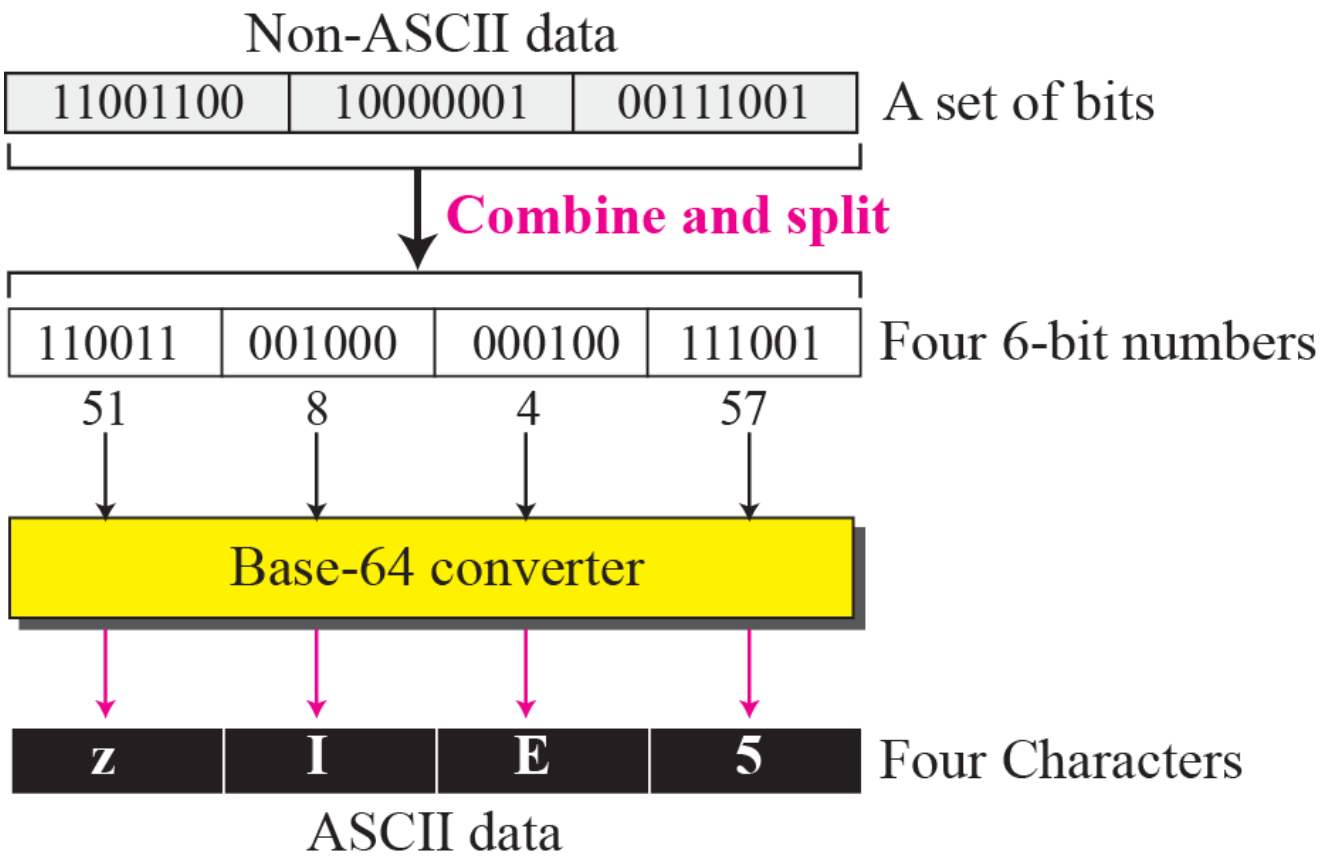

Table 23.5 *Base-64 Converting Table*

Value	*Code*	*Value*	*Code*	*Value*	*Code*	*Value*	*Code*	*Value*	*Code*	*Value*	*Code*
0	**A**	11	**L**	22	**W**	33	**h**	44	**s**	55	**3**
1	**B**	12	**M**	23	**X**	34	**i**	45	**t**	56	**4**
2	**C**	13	**N**	24	**Y**	35	**j**	46	**u**	57	**5**
3	**D**	14	**O**	25	**Z**	36	**k**	47	**v**	58	**6**
4	**E**	15	**P**	26	**a**	37	**l**	48	**w**	59	**7**
5	**F**	16	**Q**	27	**b**	38	**m**	49	**x**	60	**8**
6	**G**	17	**R**	28	**c**	39	**n**	50	**y**	61	**9**
7	**H**	18	**S**	29	**d**	40	**o**	51	**z**	62	+
8	**I**	19	**T**	30	**e**	41	**p**	52	**0**	63	/
9	**J**	20	**U**	31	**f**	42	**q**	53	**1**		
10	**K**	21	**V**	32	**g**	43	**r**	54	**2**		

Figure 23.18 *Quoted printable*

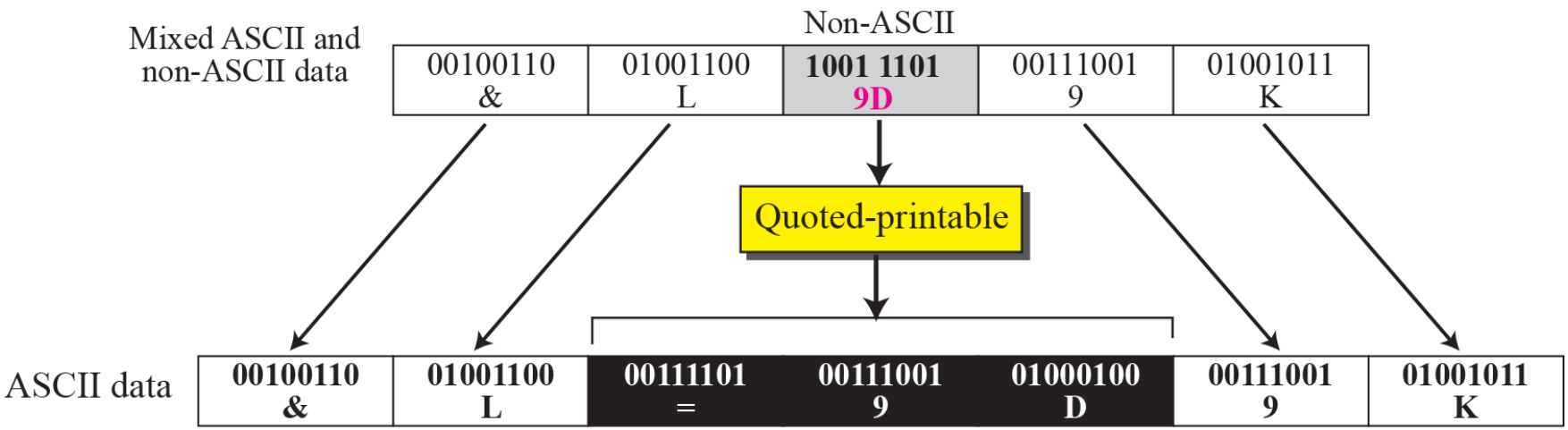

23-6 WEB-BASED MAIL

E-mail is such a common application that some websites today provide this service to anyone who accesses the site. Three common sites are Hotmail, Yahoo, and Google. The idea is very simple. Let us go through two cases:

Topics Discussed in the Section

- ✓ **Case I**
- ✓ **Case II**

Figure 23.19 *Web-based e-mail, case 1*

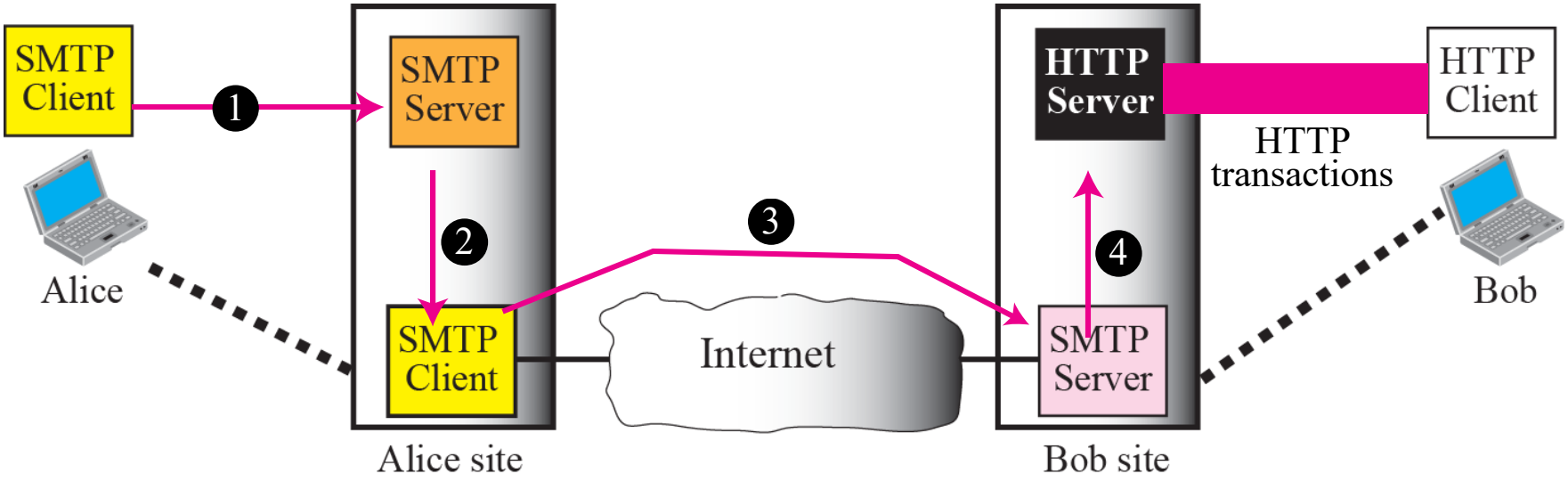

Figure 23.20 *Web-based e-mail, case 2*

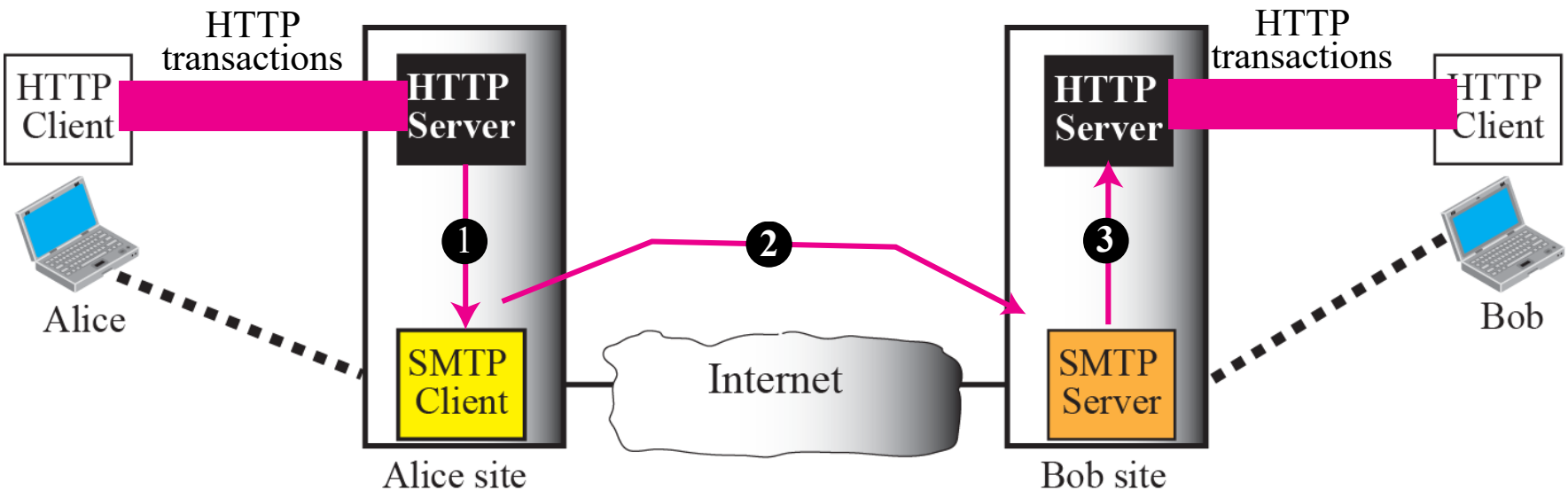

23-6 E-MAIL SECURITY

The protocol discussed in this chapter does not provide any security provisions per se. However, e-mail exchanges can be secured using two application-layer securities designed in particular for e-mail systems. Two of these protocols, Pretty Good Privacy (PGP) and Secure MIME (SMIME) are discussed in Chapter 30 after we have discussed the basic network security.